IS341/SIS334
BPM

Petri net Workflow Soundness

Petri Net

- Petri net is a tuple of (P, T, F) where P is the places, T is the Transitions and F, is the function stating which relations between the states and the transitions.
- <u>For Example</u>

  P = {c1, c2, c3, c4}

  T = {e1, e2, e3}

  F = {(c1, e1), (c1, e2), (e1, c2), (e1, c3), (e2, c3), (e2, c4), (c2, e3), (c3, e3), (c4, e3), (e3, c1)}

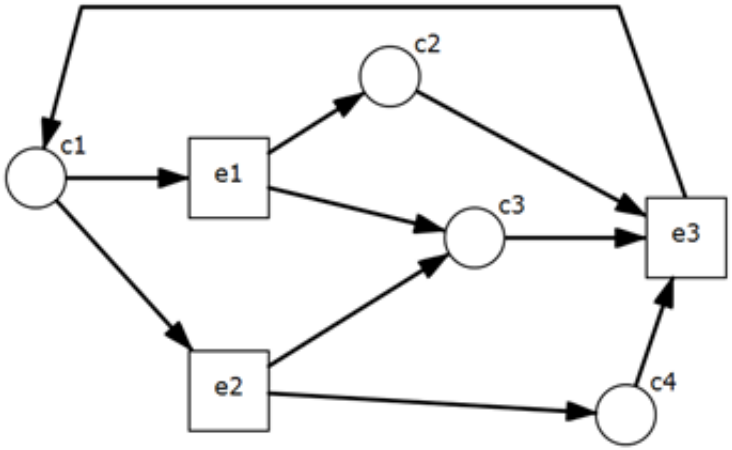

Petri Net Marking and Reachability

- <u>Example:</u> draw Reachability graph for the following Petri net

M0 = (1,0,1,0)

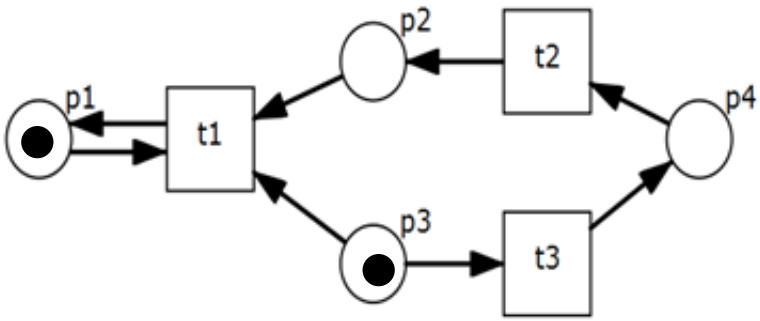

M0 = (1,0,1,0)

t3 ↓

M1 = (1,0,0,1)

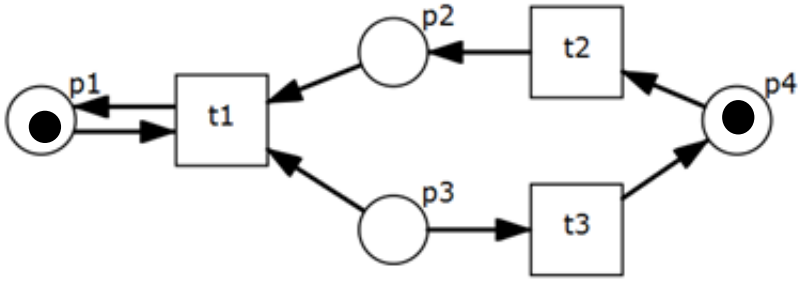

Petri Net Marking and Reachability

M0 = (1,0,1,0)

t3 ↓

M1 = (1,0,0,1)

t2 ↓

M2 = (1,1,0,0)

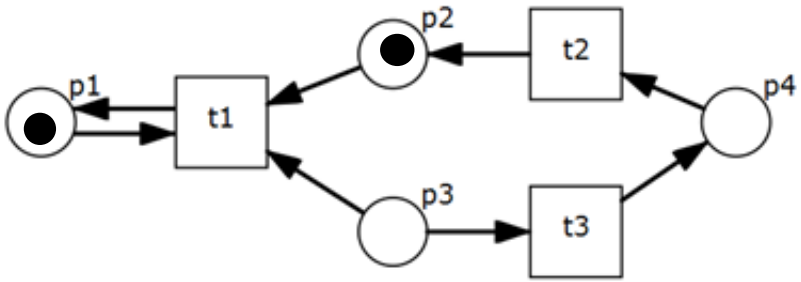

Petri net Soundness of a Workflow

- <u>How to detect that a Workflow is sound:</u>

  (1) Check if there is a path from any node to the termination state

  (2) Check if the termination state is reached only one token exists in the workflow which is in the termination state.

  (3) Check if every transition occurs in the reachability graph

Example 1

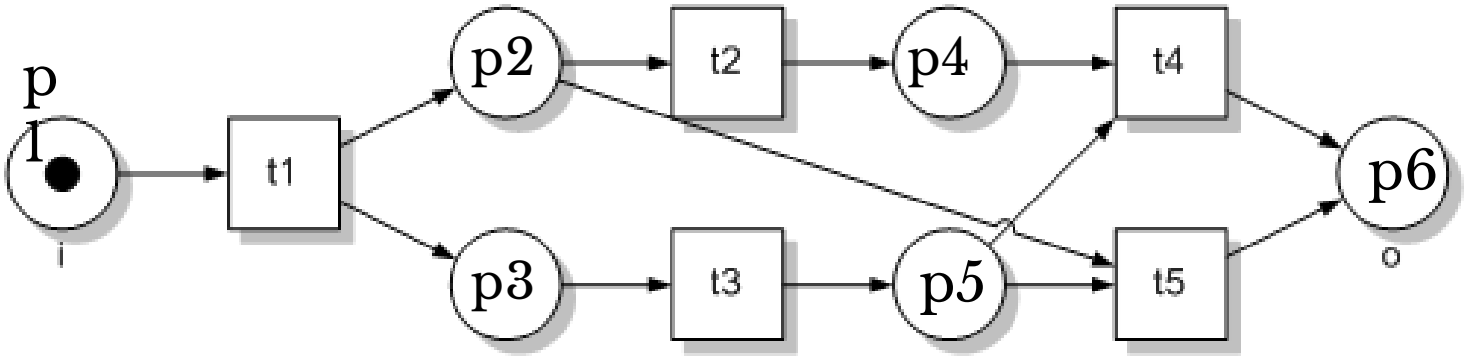

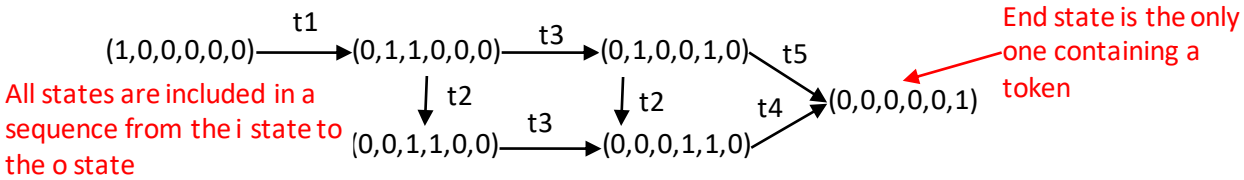

Reachability Graph shows all transitions are used (No dead transitions)

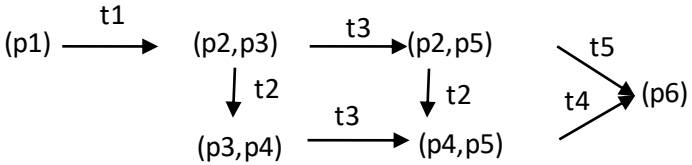

A Simpler Representation of the Reachability Graph

Sound

Example 2

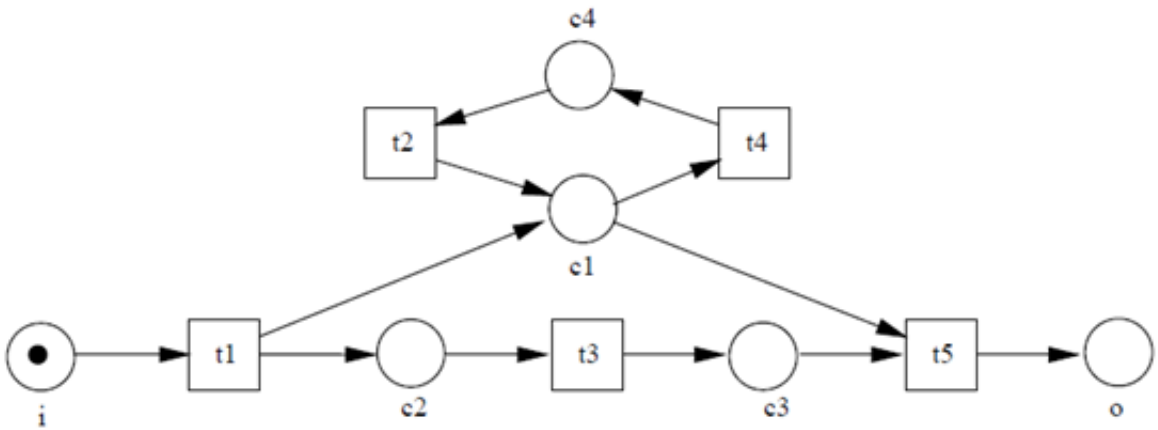

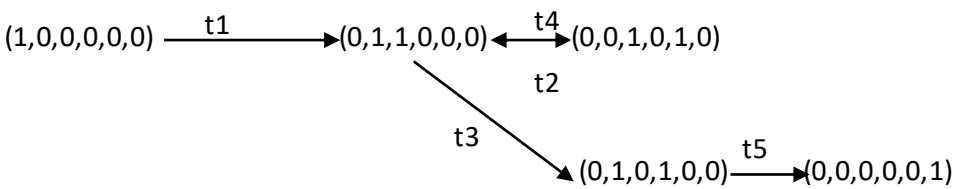

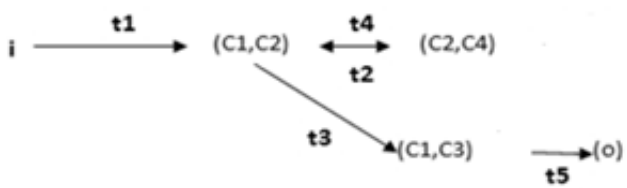

Sound

Example 3

soundness checking needs the complete reachability graph. Once you can prove that the net is not sound, you can stop completing the reachability graph.

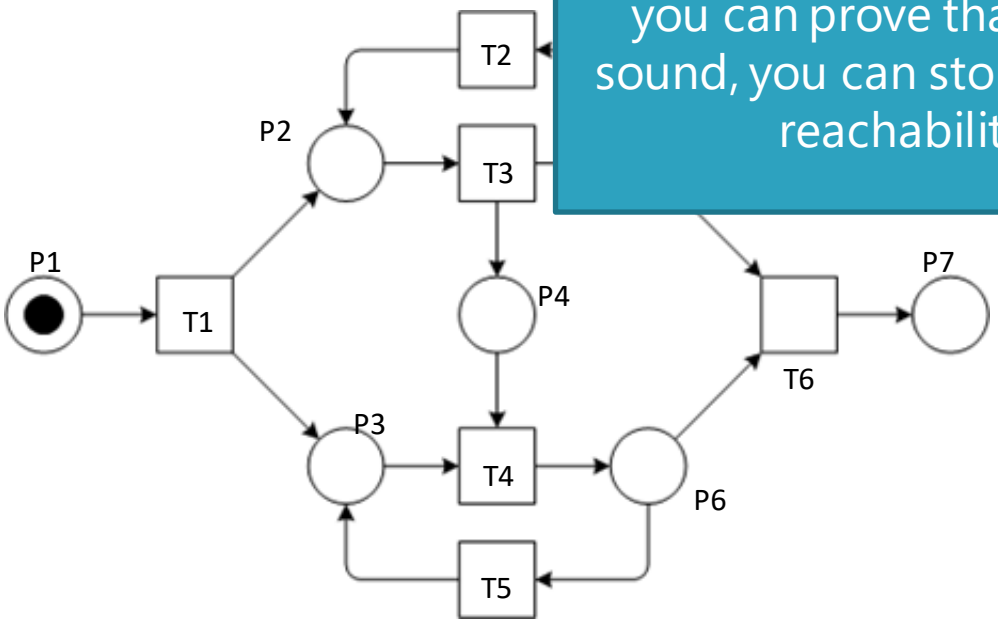

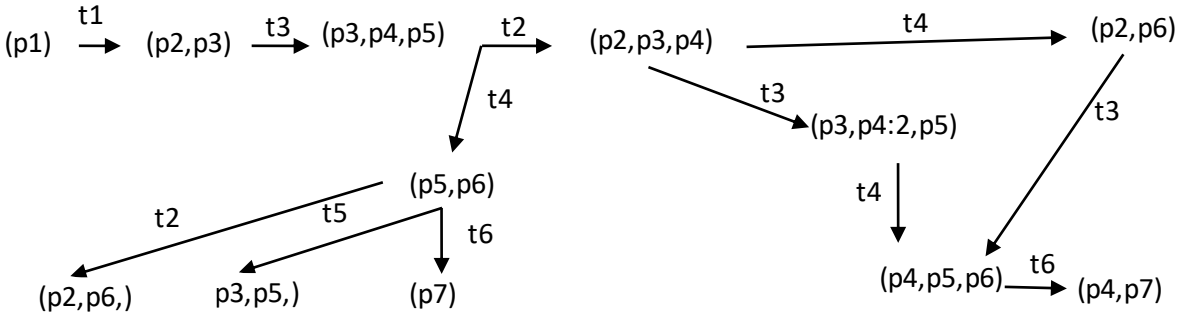

Reachability Graph shows one state when there is a remaining token at p4 while the end is reached)

Not Sound